Preliminary Specifications

C32B

ENGINE SPECIFICATIONS

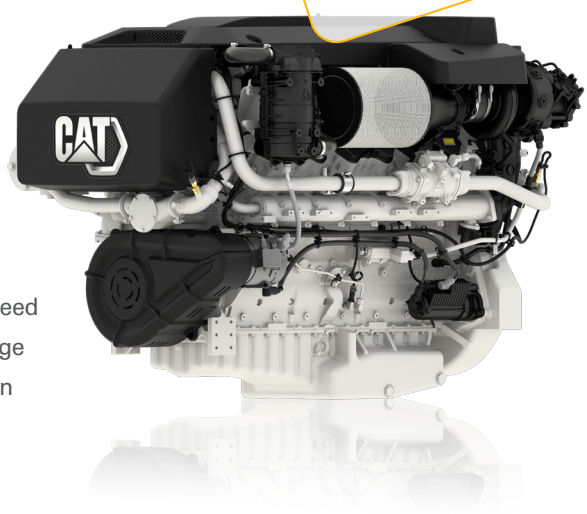

@ 2300 rpm diesel propulsion rating

- Performance Data Published at Maximum Limits at Rated Speed
- All Data contained herein is preliminary and Subject to Change
- For use in the application of Field Test Engines / Preproduction Engines Only

POWER	2000 bhp 1491 bkW	2200 bhp 1641 bkW	2400 bhp 1790 bkW
V-12, 4-Stroke-Cycle-Diesel			
Total Cylinder Displacement	32.1 L	32.1 L	32.1 L
Rated engine speed	2300 rpm	2300 rpm	2300 rpm
High idle speed	2415 rpm	2415 rpm	2415 rpm
Low idle speed	600 rpm	600 rpm	600 rpm
Bore	145 mm	145 mm	145 mm
Stroke	162 mm	162 mm	162 mm
Aspiration	Turbocharged-Aftercooled	Turbocharged-Aftercooled	Turbocharged-Aftercooled
Cooling System	SWAC	SWAC	SWAC
Governor	A6 ECU	A6 ECU	A6 ECU
Fuel system type	MEUI	MEUI	MEUI
Length	1965 mm	1965 mm	1965 mm
Width	1480 mm	1480 mm	1480 mm
Height	1485 mm	1485 mm	1485 mm
Weight, net dry (approx.)	3482 kg	3482 kg	3482 kg
Rotation (from flywheel end)	Counterclockwise	Counterclockwise	Counterclockwise
Flywheel housing/flywheel	SAE No. 0	SAE No. 0	SAE No. 0
Flywheel teeth	136	136	136

EMISSION COMPLIANCE	EPA Marine Tier 3 / IMO Tier II /IMO Tier III / RCD II

AIR INLET SYSTEM			
Intake air flow	7800 kg/hr	8100 kg/hr	8400 kg/hr
Intake air temperature - Max	50°C	50°C	50°C

ENGINE ROOM VENTILATION AIR			
Heat rejection to atmosphere	45 kW (Est.)	49 kW (Est.)	54 kW (Est.)

EXHAUST GAS DATA			
Exhaust gas flow (total)	8100 kg/hr	8450 kg/hr	8800 kg/hr
Engine exhaust connection	254 mm (Assumes CAT 3-to-1 collector used)		
Max. customer allowable system backpressure	6.7 kPa (with SCR), 10 kPa otherwise		

JACKET WATER SYSTEM			
Heat rejection	1150 kW	1260 kW	1350 kW
Design Engine Outlet Temp	99° C	99° C	99° C

AFTERCOOLER COOLING SYSTEM			
Heat rejection	385 kW	425 kW	450 kW
Design Engine Inlet Temp	32°C	32°C	32°C

Cat confidential information ANY FURTHER USE, DISTRIBUTION OR COPYING OF THIS INFORMATION IS STRICTLY PROHIBITED.

Preliminary Specifications

C32B ENGINE SPECIFICATIONS

POWER	2000 bhp 1491 bkW	2200 bhp 1641 bkW	2400 bhp 1790 bkW
SEA WATER COOLING SYSTEM			
Flow Rate - Front Pump Flow (JW HEX) Flow Rate - Rear Pump Flow (SWAC)	556 lpm 560 lpm	556 lpm 560 lpm	556 lpm 560 lpm
External Restriction	30 kPa	30 kPa	30 kPa
Max Design Sea Water Inlet Temp	32°C	32°C	32°C
Connection Size - engine inlets Connection Size - engine outlet	76.2 mm Class 150 ANSI flange	76.2 mm Class 150 ANSI flange	76.2 mm Class 150 ANSI flange
Fuel flow to transfer pump	1080 l/hr	1080 l/hr	1080 l/hr
Fuel rate (max)	478 l/hr	442 l/hr	478 l/hr
Brake Specific Fuel Consumption	231 g/bkw-hr	226 g/bkw-hr	224 g/bkw-hr
Connection Size / type - supply Connection Size / type - return	JIC 37deg – 10 (7/8-14)	JIC 37deg – 10 (7/8-14)	JIC 37deg – 10 (7/8-14)
External System Restriction - supply	27 kpa	27 kpa	27 kpa
External System Restriction - return	30 kpa	30 kpa	30 kpa
OPERATING FLUIDS			
Lubricating Oil	15W40 (CJ-4)	15W40 (CJ-4)	15W40 (CJ-4)
Engine Coolant	50% Glycol (up to 25C SW), Treated Water > 25C SW		
Fuel Type / Quality	Ultra Low Sulfur Diesel Fuel	Ultra Low Sulfur Diesel Fuel	Ultra Low Sulfur Diesel Fuel
Max sulfur	1000 ppm	1000 ppm	1000 ppm
Urea (IMO III only)	32.5 % or 40 %	32.5 % or 40 %	32.5 % or 40 %
EXHAUST GAS AFTERTREATMENT (IF REQUIRED)			
Estimated Weight – SCR module (with substrates installed)	425 kg	425 kg	425 kg
Estimated Weight – Dosing Cabinet	90 kg	90 kg	90 kg

@2300RPM **1491 bkW** Marine Prop Preliminary
BSFC & DEF Consumption

ENGINE		Brake spec fuel cons. (bsfc)	Def consumption	
SPEED	POWER		at 32.5% (L/hr)	at 40% (l/hr)
RPM	BKW	G/BKW-HR	L / HR	L / HR
2,300	1491	227	12.7	12.4
2,093	1118	227	6.0	5.9
1,840	746	228	3.4	3.3
1,449	373	228	2.6	2.6

@2300RPM **1641 bkW** Marine Prop Preliminary
BSFC & DEF Consumption

ENGINE		Brake spec fuel cons. (bsfc)	Def consumption	
SPEED	POWER		at 32.5% (L/hr)	at 40% (l/hr)
RPM	BKW	G/BKW-HR	L / HR	L / HR
2,300	1641	226	14.3	14.1
2,093	1231	222	7.7	7.6
1,840	821	220	4.0	4.0
1,449	410	221	2.8	2.7

@2300RPM **1790 bkW** Marine Prop Preliminary
BSFC & DEF Consumption

ENGINE		Brake spec fuel cons. (bsfc)	Def consumption	
SPEED	POWER		at 32.5% (L/hr)	at 40% (l/hr)
RPM	BKW	G/BKW-HR	L / HR	L / HR
2,300	1789	224	16.8	16.4
2,093	1343	226	9.4	9.1
1,840	895	223.5	3.9	3.8
1,449	447	211	2.7	2.6

Dosing Cabinet

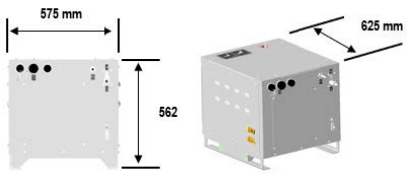

SCR Module (L-Flow Configuration)

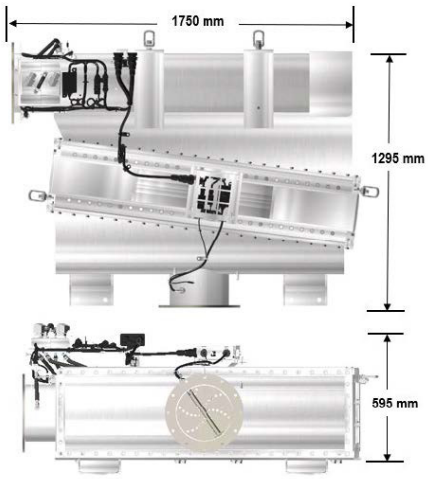

Fig. 1 – SCR module and Dosing Cabinet

WE TAKE CARE OF IT.

Pon Power BV
T. +31 78 6420 420
pon-cat.com/marinepower

Cat confidential information ANY FURTHER USE, DISTRIBUTION OR COPYING OF THIS INFORMATION IS STRICTLY PROHIBITED.